SBP TX 1160

CS Italia s.r.l.

Optional su richiesta info@carrellispeciali.it

CS Italia s.r.l. Carrelli Speciali Italia - Via Pavia 9, 26831 Casalmaiocco - Lodi - Italy - Tel +39 02 98876 001 Fax +39 02 98876 350
info@carrellispeciali.it - www.carrellispeciali.it

SBP TX 1160

CS Italia s.r.l.

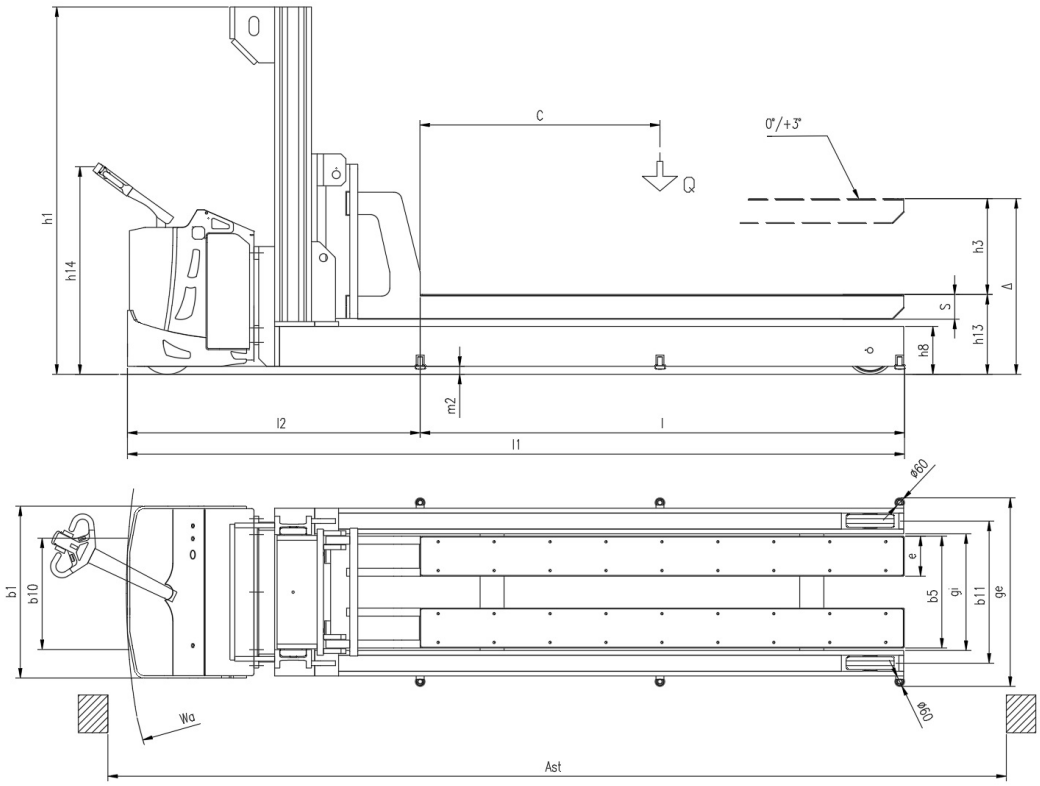

Illustrazioni e dati tecnici non sono impegnativi. Il costruttore si riserva il diritto di apportare modifiche senza preavviso.

Tipologia SBP TX 1160	**Categoria**

CSI Carrelli Speciali Italia

CS Italia s.r.l. Carrelli Speciali Italia - Via Pavia 9, 26831 Casalmaiocco - Lodi - Italy - Tel +39 02 98876 001 Fax +39 02 98876 350
info@carrellispeciali.it - www.carrellispeciali.it

DATI TECNICI

SBP TX 1160

CS Italia s.r.l.

General info	1.1	Manufacturer			CSI s.r.l.
	1.2	Model			SBP TX 1160
	1.3	Drive			elettrico AC
	1.4	Operator type			a timone
	1.5	Load capacity	Q	t	2
	1.6	Load centre	c	mm	1500
	1.9	Wheelbase	y	mm	4400
Weights	2.1	Truck weight without battery		Kg	4200
Wheels and chassis	3.1	Wheels			Poliuretano
	3.2	Wheels size front		mm	350x140
	3.3	Wheels size rear		mm	300x80
	3.4	Additional wheels size		mm	200x80
	3.5	Number of rear/front wheels (x = Traction wheel)			1X+2 / 1+1
	3.6	Front wheelbase	b10	mm	600
	3.7	Rear wheelbase	b11	mm	890
	3.9	Overall width legs	ge	mm	1180
	3.10	Inside width legs	gi	mm	730
	3.11	Legs height	h8	mm	300
Dimensions	4.1	Tilt		°	0/+2
	4.2	Height mast lowered	h1	mm	2300
	4.4	Lift height	h3	mm	600
	4.9	Height of tiller (min/max)	h14	mm	975/1535
	4.15	Height forks lowered	h13	mm	500
	4.19	Overall length	l1	mm	4860
	4.20	Length to face of forks	l2	mm	1830
	4.21	Overall width	b1	mm	1076
	4.22	Forks dimensions	s/e/l	mm	155/250/3020
	4.25	Overall forks width size	b5	mm	700
	4.31	Ground clearance		mm	40
	4.34	Aisle width	ast	mm	5600
	4.35	Turning radius	wa	mm	4650
Performance	5.1	Travel speed with/without load		Km/h	2/5
	5.2	Lifting speed with/without load		m/s	0.11/0.33
	5.3	Lowering speed with/without load		m/s	0.5/0.2
	5.8	Maximum gradeability with/without load		%	1/3
	5.10	Service brake			elettrico
Motor	6.1	Traction motor S2 60 min.		Kw	5
	6.2	Lift motor S3		Kw	2
	6.3	Battery			Piombo acido
	6.4	Battery - voltage and nominal capacity		V/Ah	48v 250ah
	6.5	Battery weight		Kg	420
	Dim. batteria	Battery size		mm	1015/255/627
Other	8.1	Traction control			proporzionale
	8.4	Noise level driver place			<70